WSA-00310-2 (Page 1)

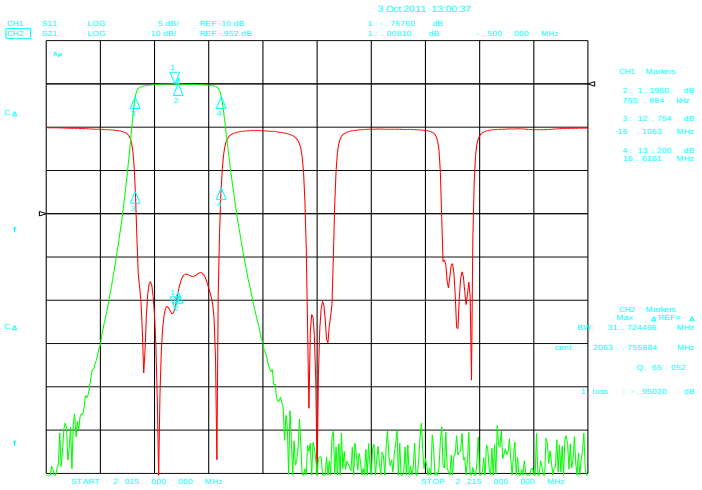

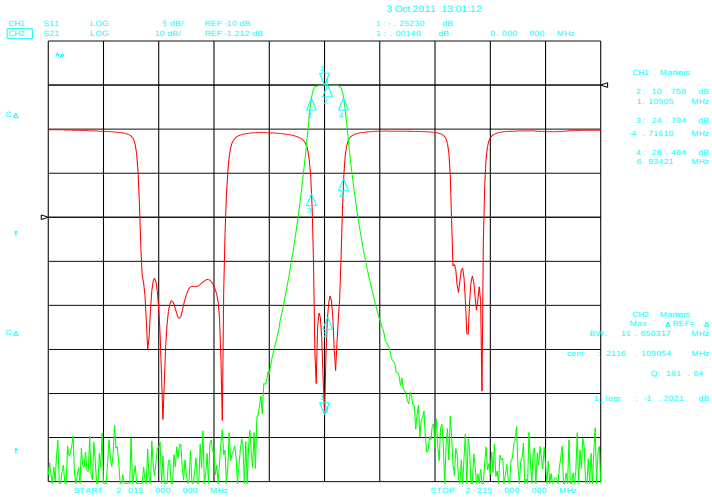

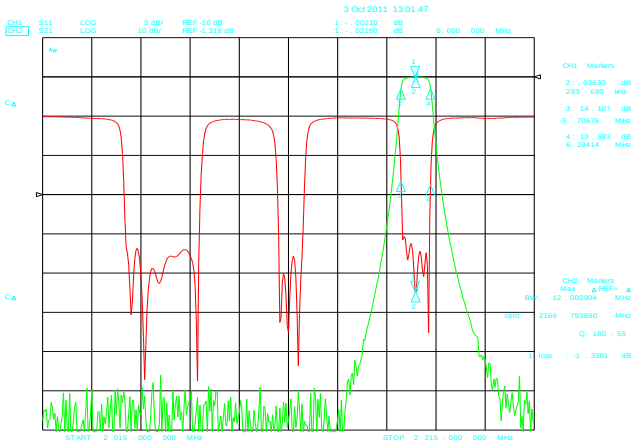
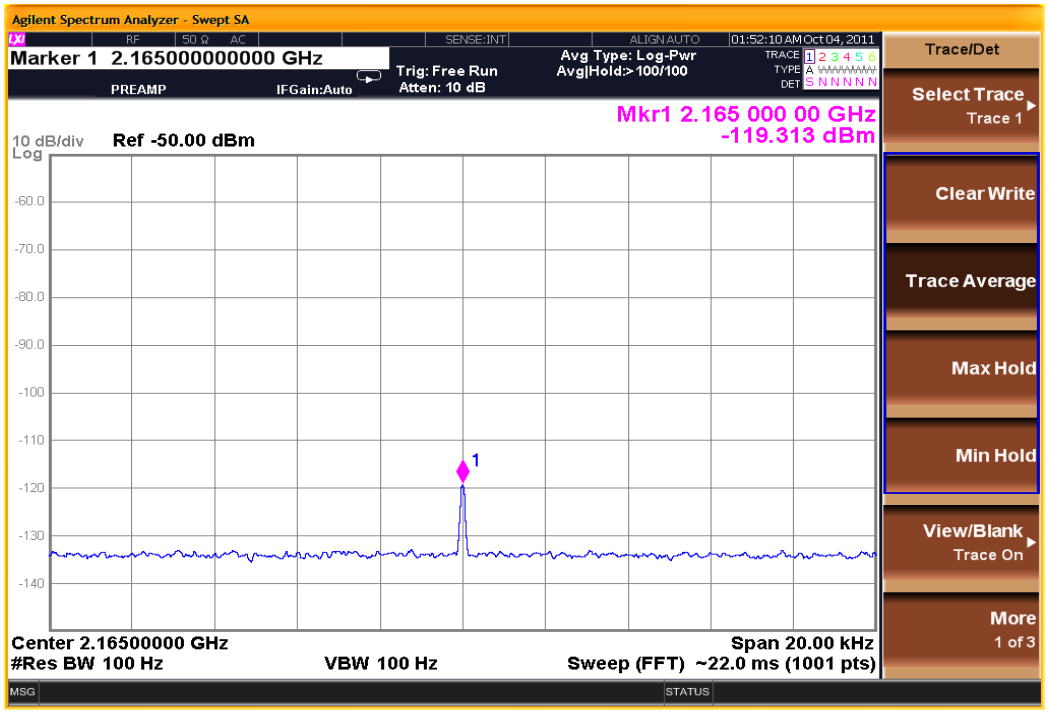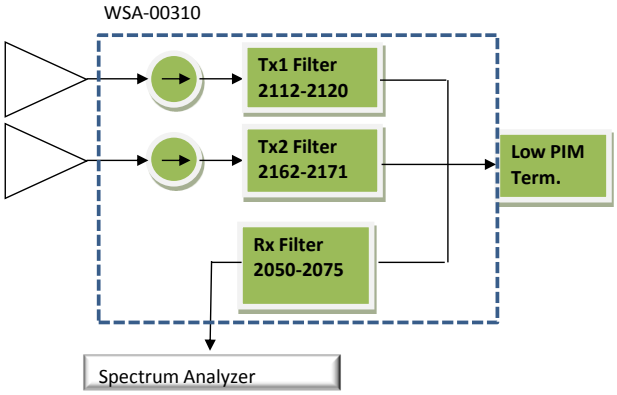
WSA-00310-2 (Page 2)